5.1 Electrical circuits

Name: _____ Class: _____ Date: _____ **Total: 19 marks**

Objective

Cover electrical circuits (3.5.1): charge flow I = Q/t, voltage and V = E/Q, circuit symbols, V = IR with the V-I characteristics of a resistor, lamp, diode, (P) thermistor and LDR, and series/parallel rules. Original OxfordAQA practice.

1 Key knowledge and worked examples

■ The three circuit equations

$$I = Q/t \qquad V = E/Q \qquad V = IR$$

Worked check. A 6 V battery drives 0.3 A through a lamp: R = 6/0.3 = 20 Ω; in 5 minutes the charge flow is Q = 0.3 × 300 = 90 C and the energy E = 6 × 90 = 540 J.

■ Component shapes and connection rules

series: one loop

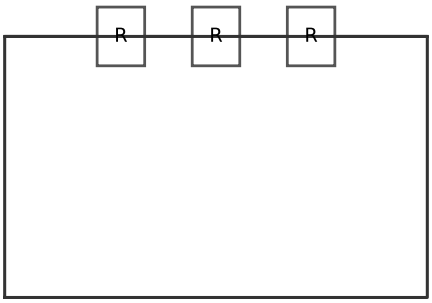

same current; p.d.s add; R = $R_1 + R_2$

parallel: branches

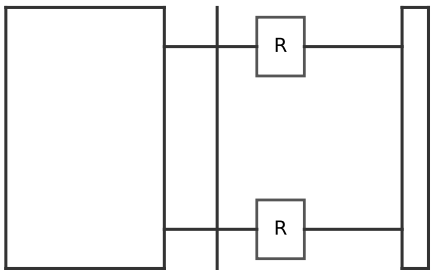

same p.d.; currents add; R less than either

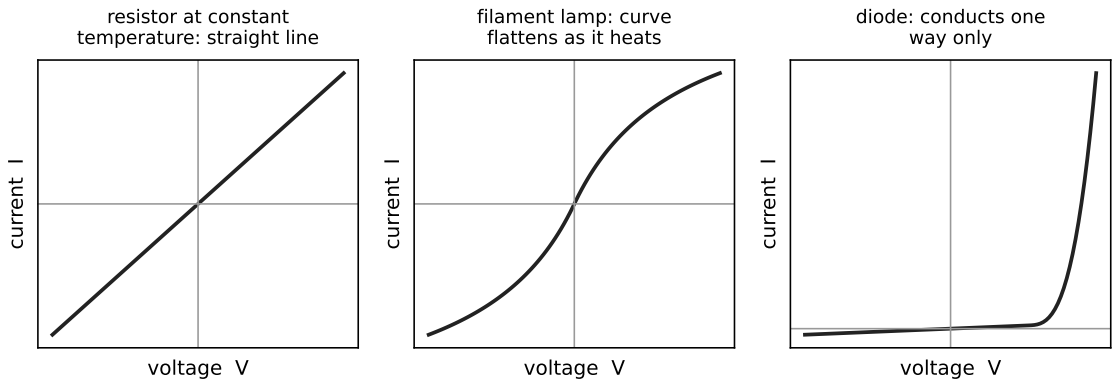

2 Practice

2.1 Calculate the charge flow for 0.4 A over 50 s. [2]

2.2 Calculate R if 9 V drives 0.15 A. [2]

2.3 State the p.d. rule for components in parallel. [1]

2.4 (P) What does an LDR do as light intensity increases? [1]

2.5 Why does a filament lamp's resistance rise as it brightens? [2]

3 Exam-style questions

3.1 A 12 V supply feeds 4 Ω and 2 Ω resistors in series. Calculate the circuit current and each resistor's p.d. [4]

3.2 The same resistors are now in parallel across 12 V. Calculate each branch current and the supply current. [4]

3.3 (P) Explain how a thermistor and a fixed resistor could switch a heating system on when temperature falls. [3]

Solutions

2.1 $Q = 0.4 \times 50 = 20$ C.

2.2 $R = 9/0.15 = 60\ \Omega$.

2.3 The p.d. across each branch/component is the same.

2.4 (P) Its resistance falls.

2.5 The larger current raises the filament's temperature; the lattice ions vibrate more, so electrons collide with them more often – more resistance.

3.1 $R = 4 + 2 = 6\ \Omega$; $I = 12/6 = 2$ A; $V_1 = 2 \times 4 = 8$ V; $V_2 = 2 \times 2 = 4$ V – they add to 12 V.

3.2 Branch 1: $I = 12/4 = 3$ A; branch 2: $I = 12/2 = 6$ A; supply $I = 3 + 6 = 9$ A.

3.3 (P) Connect them as a potential divider across the supply; as temperature falls the thermistor's resistance rises, so the fixed resistor's share of p.d. falls; the circuit detects this change and switches the heater on.