Structure 1.3 · Electron configurations · supported focus

International Baccalaureate · IB Diploma · Chemistry · SL

Scope and prerequisites

Supported SL core focus. First assessment 2025; current brief acquired; full Chemistry guide not acquired. Remaining guide, assessment and practical requirements retain their recorded holds.

Prerequisites: atomic number and the structure of the atom from Structure 1.2, arithmetic with powers of ten, and the wave relation $c = f\lambda$. Each lesson develops its own method before independent transfer.

These are original or explicitly fictional teaching examples, not actual measurements or completed assessed learner investigations.

Electron configurations

■ What would explain this observation?

- A hydrogen discharge tube glows, and a prism splits the light into a few exact coloured lines – not a continuous rainbow. Why only those colours?
- Start with a prediction. State the quantities or features you would compare, then decide what evidence could distinguish two explanations.

■ Build the model

- An electron in an atom can only occupy fixed **energy levels** . When it falls from a higher level to a lower one, it emits one photon whose energy equals the gap: $E_2 - E_1 = hf$. A line **emission spectrum** is the set of these exact photon energies, so each element shows its own pattern of lines.
- Electrons fill the levels in a fixed order from lowest energy: 1s, 2s, 2p, 3s, 3p, 4s, 3d, 4p. An **orbital** holds at most two electrons with opposite spins. The electron configuration lists the occupied sublevels, for example iron: $1s^2\ 2s^2\ 2p^6\ 3s^2\ 3p^6\ 4s^2\ 3d^6$, written compactly as [Ar] $4s^2\ 3d^6$.
- energy level: A fixed energy an electron may have in an atom; orbital: A region holding at most two electrons with opposite spins; emission spectrum: The exact set of light frequencies an element emits.

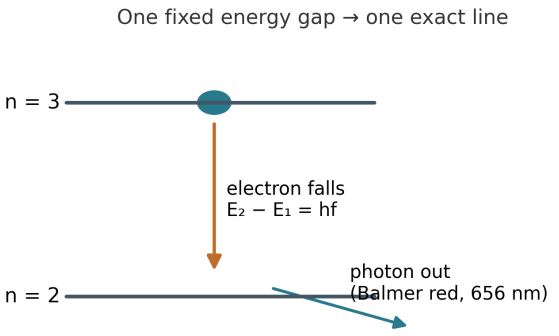

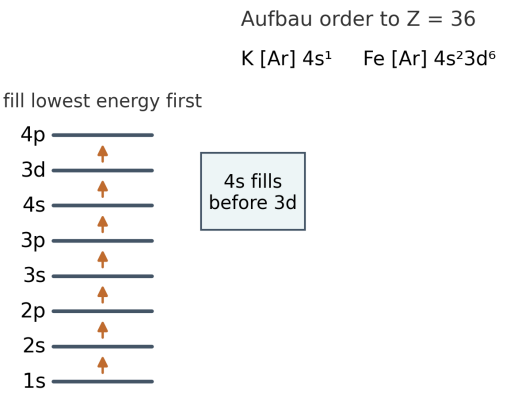

■ Choose evidence that can test it

- The emission lines of hydrogen fall at exact frequencies predicted by the level gaps. If electrons could have any energy, the spectrum would be continuous – the observed separate lines are the evidence for fixed levels.
- The first ionisation energies of successive elements rise in steps and fall at the start of each new shell, matching the order in which sublevels fill. Compare a measured spectrum or ionisation pattern with the configuration model before accepting an explanation.

■ Work from known quantities

- State the known values and their units. Choose the relation because its assumptions fit this case, then rearrange before substitution.
- Known: the red Balmer line of hydrogen has wavelength $\lambda = 656$ nm $= 656 \times 10^{-9}$ m; $c = 3.00 \times 10^{8}$ m/s and $h = 6.63 \times 10^{-34}$ J s. The photon energy equals the level gap: $E = hf$ and $f = c/\lambda$, so $E = hc/\lambda$. Substitution: $E = (6.63 \times 10^{-34} \times 3.00 \times 10^{8})/(656 \times 10^{-9}) = 3.03 \times 10^{-19}$ J. This is the energy gap between the n = 3 and n = 2 levels.

Example:

The ultraviolet line of hydrogen has $\lambda = 122$ nm. Find the photon energy using the same sequence: known quantities → model → relation → substitution → unit and interpretation. (Answer: $E = 6.63 \times 10^{-34} \times 3.00 \times 10^{8} / (122 \times 10^{-9}) = 1.63 \times 10^{-18}$ J – about five times the red line's energy, because it spans the larger gap down to n = 1.)

■ Check the conclusion and its limits

- The filling order 4s before 3d is an empirical energy order for NEUTRAL atoms; when atoms lose electrons to form ions, the 4s electrons leave first (iron forms Fe^{2+} as [Ar] $3d^6$, not [Ar] $4s^2$ $3d^4$). The simple order also has noted exceptions such as chromium [Ar] $4s^1$ $3d^5$.
- Return to the original observation. Explain what the result supports, which conditions it assumes, and one way to test a competing explanation.

Warn:

Electrons in an atom can occupy any energy between the shells. This claim is false: the separate lines of an emission spectrum appear only because electrons fall between fixed energy levels; a continuum of allowed energies would give a continuous spectrum, which is not observed.

Key:

Electron configurations: electrons occupy fixed energy levels, and the photon energy of each emission line equals the gap between two levels, $E = hc/\lambda$. Sublevels fill in the order 1s 2s 2p 3s 3p 4s 3d 4p, with at most two opposite-spin electrons per orbital.