7 Simple harmonic motion, period, and frequency – Part 1

Name: _____ Class: _____ Date: _____

Vocabulary

Write each word three times.

English	Write it 3 times (English)		
Simple harmonic motion			
oscillation			
restoring force			
period			
frequency			

Recall

You have watched things swing and bounce back and forth:

- A pendulum swings side to side; a mass on a spring bounces up and down.
- The motion repeats over and over, each cycle taking about the same time.
- A stiffer spring bounces faster; a longer pendulum swings slower.

This sheet gives the repeating motion a name – simple harmonic motion – and simple formulas. Each idea has a worked example.

New ideas

1 Simple harmonic motion

Simple harmonic motion (SHM) is a back-and-forth **oscillation** caused by a **restoring force** that always pulls the object back toward the middle, and grows with the distance from the middle ($F = -kx$).

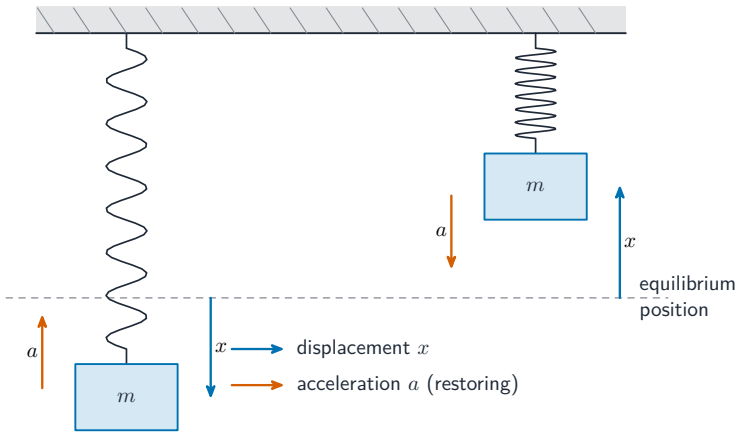

A mass on a spring, and a pendulum swinging through **small** angles, are the standard examples.

2 Period and frequency

- The **period** T is the time for one full cycle.
- The **frequency** $f = \dfrac{1}{T}$ is the number of cycles per second (in hertz, Hz).

3 The period formulas

For SHM the period depends only on the system, **not** on how big the swing is:

$$T_{\text{spring}} = 2\pi\sqrt{\frac{m}{k}}, \qquad T_{\text{pendulum}} = 2\pi\sqrt{\frac{L}{g}}.$$

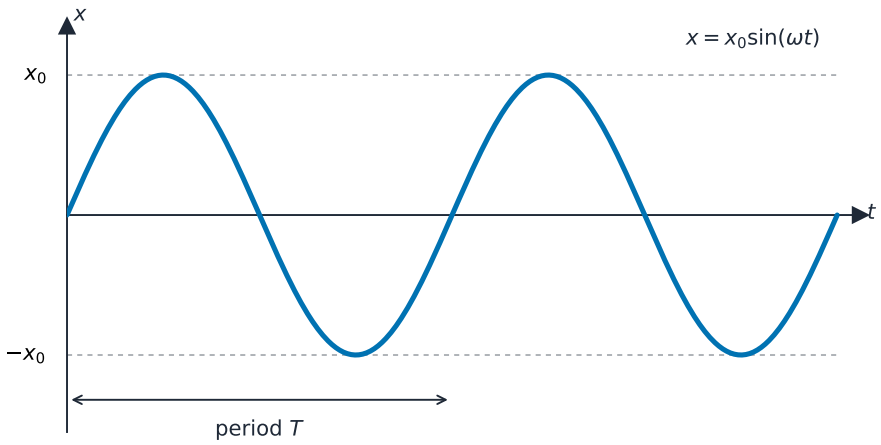

Worked example. A 0.25 kg mass hangs on a spring of stiffness $k = 100$ N/m:

$$T = 2\pi\sqrt{\frac{m}{k}} = 2\pi\sqrt{\frac{0.25}{100}} = 0.31 \text{ s}, \qquad f = \frac{1}{T} = 3.2 \text{ Hz}.$$

Watch out: the period does **not** depend on the amplitude – a wide swing and a narrow swing take the same time. That is exactly what makes a pendulum a good clock.

Practice

Try these in order. The methods are all above.

2.1 A pendulum completes one full swing (there and back) in 2.0 s. State its period and find its frequency. [2]

2.2 Name the two conditions a force must meet to cause simple harmonic motion. [2]

2.3 A 0.40 kg mass sits on a spring of stiffness $k = 160$ N/m. Find the period of its oscillation. [3]

2.4 State what happens to a spring's period if the mass is increased. [1]

2.5 A pendulum has period 1.0 s. A student makes the swing wider (larger amplitude). State the effect on the period, and explain. [2]