Revision Sheet

A-Level Physics · Unit 8 Superposition

10 vocabulary items · 21 marks of exam questions (6 questions)

Part 1 · Vocabulary review (10 items). The terms this unit is examined on most. Mark it yourself from the answer key.

Section A · English dictation

Listen to each word and write it in English. The teacher reads the numbered answer key aloud.

1. Dictation item 1. _____ [1]
2. Dictation item 2. _____ [1]
3. Dictation item 3. _____ [1]
4. Dictation item 4. _____ [1]
5. Dictation item 5. _____ [1]
6. Dictation item 6. _____ [1]
7. Dictation item 7. _____ [1]
8. Dictation item 8. _____ [1]
9. Dictation item 9. _____ [1]
10. Dictation item 10. _____ [1]

Part 2 · Exam questions (21 marks, 6 questions) begins on the next page. They are ordered easy to difficult and none of them has been set before.

11 Two light sources are used to produce an interference pattern.

Interference fringes appear when the two sources emit waves that are coherent.

What is meant by coherent waves?

A The two waves are emitted with the same frequency.

B The two waves are emitted with constant phase difference.

C The two waves are emitted with the same intensity.

D The two waves are emitted with zero phase difference.

A-Level Physics · Unit 8 revision: **s25 11**

12 One wave has an amplitude of $2A$. A second wave has an amplitude of $\frac{A}{2}$. The waves are otherwise identical.

The two waves travel in opposite directions and overlap.

What is the ratio $\frac{\text{maximum amplitude of combined wave}}{\text{minimum amplitude of combined wave}}$?

A $\frac{3}{2}$ **B** $\frac{5}{3}$ **C** $\frac{5}{2}$ **D** 4

A-Level Physics · Unit 8 revision: **s25 12**

13 A student uses a diffraction grating to determine the wavelength of visible light from a source.

The diffraction grating has 300 lines per mm. The student measures the angle θ of each order n of the intensity maxima. A graph of n against $\sin\theta$ is plotted. The line of best fit for the plotted points is shown and has gradient G.

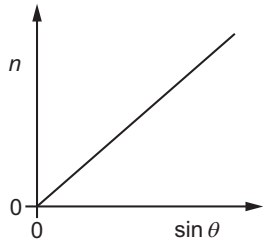

Which expression represents the wavelength, in m, of the visible light in terms of G?

A $3 \times 10^{5}\,G$ **B** $3.3 \times 10^{-6}\,G$ **C** $\frac{3.3 \times 10^{-6}}{G}$ **D** $\frac{300}{G}$

14 A ripple tank contains water at a constant depth.

A water wave of constant frequency travels towards a gap in a barrier placed in the ripple tank.

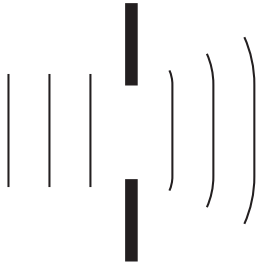

The gap is made smaller.

Which diagram represents the wave before and after the barrier?

A

B

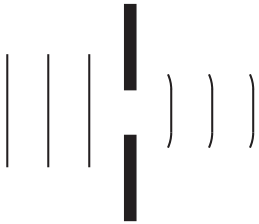

C

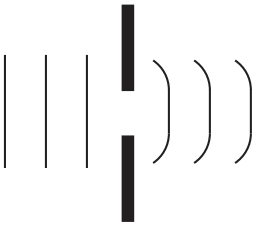

D

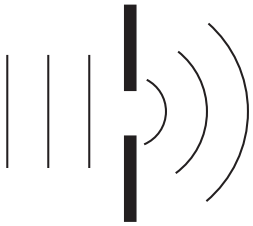

15 **(a)** State the principle of superposition.

.....

.....

..... [2]

(b) Light of wavelength 7.2×10^{-7} m is incident normally on a double slit, as shown in Fig. 4.1.

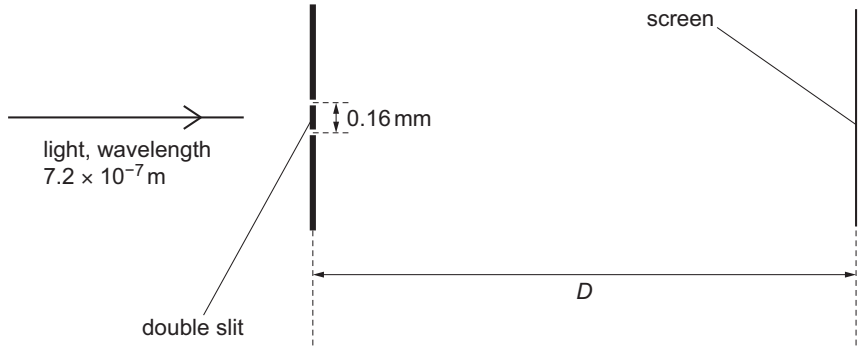

Fig. 4.1 (not to scale)

A screen is at a distance *D* from the double slit. The double slit and the screen are parallel.

The separation of the slits in the double-slit arrangement is 0.16 mm. The resulting interference pattern on the screen contains nine dark fringes, as shown in Fig. 4.2.

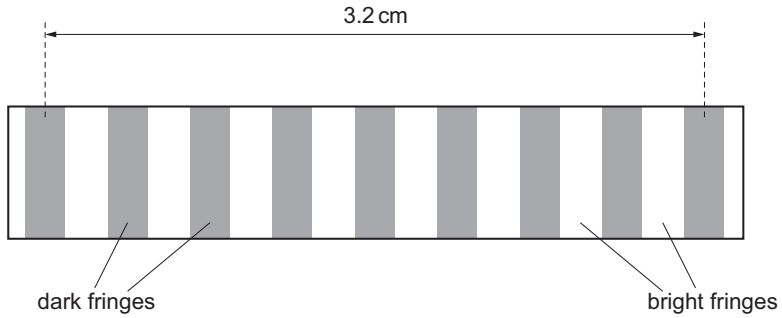

Fig. 4.2 (not to scale)

The distance between the centres of the first and ninth dark fringes is 3.2 cm.

(i) Calculate *D*.

D = ... m [3]

(ii) The slit separation is now gradually decreased from 0.16 mm to 0.04 mm. The distance between the centres of adjacent dark fringes is *x*.

On Fig. 4.3, sketch the variation of *x* with slit separation.

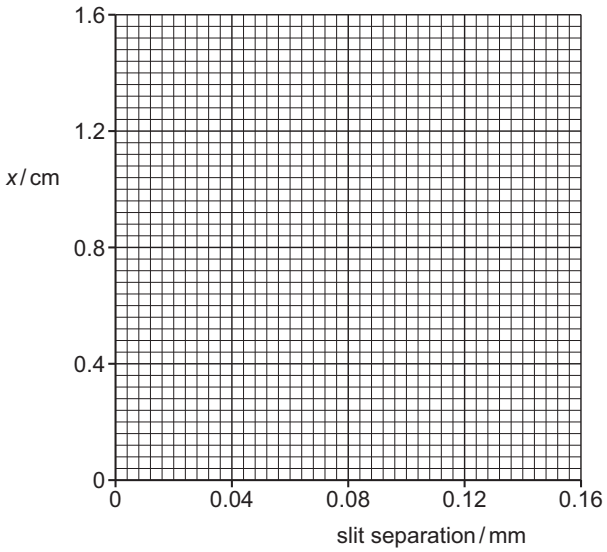

Fig. 4.3

[3]

[Total: 8]

16 **(a)** State the principle of superposition.

.....

.....

..... [2]

(b) Coherent light is incident normally on two identical slits X and Y. The diffracted light emerging from the slits superposes to produce an interference pattern on a screen positioned at a distance of 1.9 m from the slits.

Fig. 4.1 shows the arrangement and the central part of the interference pattern of bright and dark fringes formed on the screen.

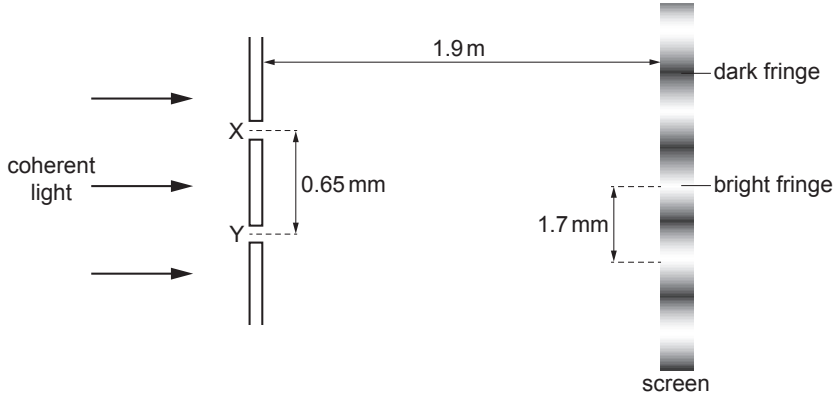

Fig. 4.1 (not to scale)

The separation of the slits is 0.65 mm. The distance between the centres of adjacent bright fringes is 1.7 mm.

Calculate the wavelength λ of the light.

λ = ... m [3]

(c) Light waves from slits X and Y in **(b)** arrive at a point between adjacent bright fringes on the screen. Fig. 4.2 shows the variation of displacement with time for the waves arriving at the point where they meet.

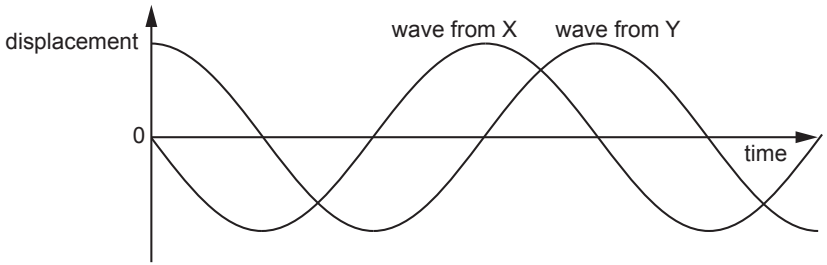

Fig. 4.2

A student makes two statements about the waves at this point:

Statement 1: 'The phase difference between the waves is 90°.'

Statement 2: 'The amplitude of the resultant wave is zero.'

(i) Explain how statement 1 is correct.

.....

.....

..... [1]

(ii) State and explain whether statement 2 is correct.

.....

.....

..... [1]

(d) The width of each slit in **(b)** is decreased by the same amount. There is no change to the separation of the slits.

Describe and explain the effect, if any, of this change on the appearance of the interference pattern.

.....

.....

..... [2]

[Total: 9]