Dynamics

A-Level Physics

Mass, momentum and force

Mass

Mass tells you how hard it is to change an object's motion. The larger the mass, the larger the **force** needed to give it a certain **acceleration**. Mass is measured in kilograms (kg) and is a **scalar**.

Momentum

Linear momentum is the product of mass and velocity:

$$p = mv.$$

Momentum is a **vector** – it points the same way as the **velocity**. Its unit is kg m s^{-1}, which is the same as N s.

Force as the rate of change of momentum

Newton's second law, in its general form: the **resultant force** on an object equals the rate of change of its momentum.

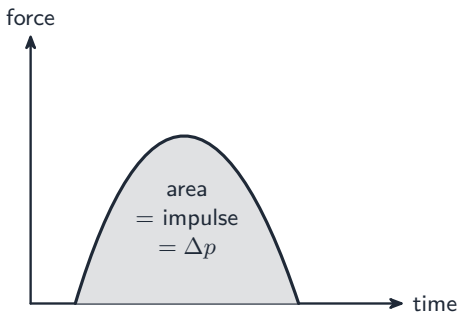

Impulse is the area under a force-time graph, equal to the change in momentum

$$F = \frac{\Delta p}{\Delta t}.$$

When the mass is constant this becomes $F = ma$, because $\Delta p = m\,\Delta v$ and $\Delta v/\Delta t = a$. Cambridge questions often want you to use $F = \Delta p/\Delta t$ directly for a **collision** or an **impulse**: the average force equals the change in momentum divided by the contact time.

A ball hits a wall with momentum p_1 and bounces back with momentum p_2 in the opposite direction. The change in momentum is $\Delta p = p_2 - p_1$ (give each direction the correct sign). The average force is $\Delta p/\Delta t$, where Δt is the contact time.

> **Worked example.** A 0.20 kg ball hits a wall at 8.0 m s^{-1} and bounces straight back at 6.0 m s^{-1}. The contact lasts 0.050 s. Find the average force on the ball.

Take the rebound direction as positive, so $u = -8.0$ m s^{-1} and $v = +6.0$ m s^{-1}:

$$\Delta p = m(v - u) = 0.20 \times \big(6.0 - (-8.0)\big) = 2.8 \text{ kg m s}^{-1},$$

$$F = \frac{\Delta p}{\Delta t} = \frac{2.8}{0.050} = 56 \text{ N}.$$

When you know the momentum but not the speed, the change in **kinetic energy** is

$$\Delta E_\mathrm{k} = \frac{p_2^2 - p_1^2}{2m}.$$

This comes from $E_\mathrm{k} = \frac{1}{2}mv^2 = p^2/(2m)$.

Momentum–time graphs

Because $F = \Delta p/\Delta t$, the **gradient** of a momentum–time graph is the resultant force, just as the gradient of a velocity–time graph is the acceleration. A straight line means a constant resultant force; a horizontal line means zero resultant force; a line sloping down means a force acting against the motion.

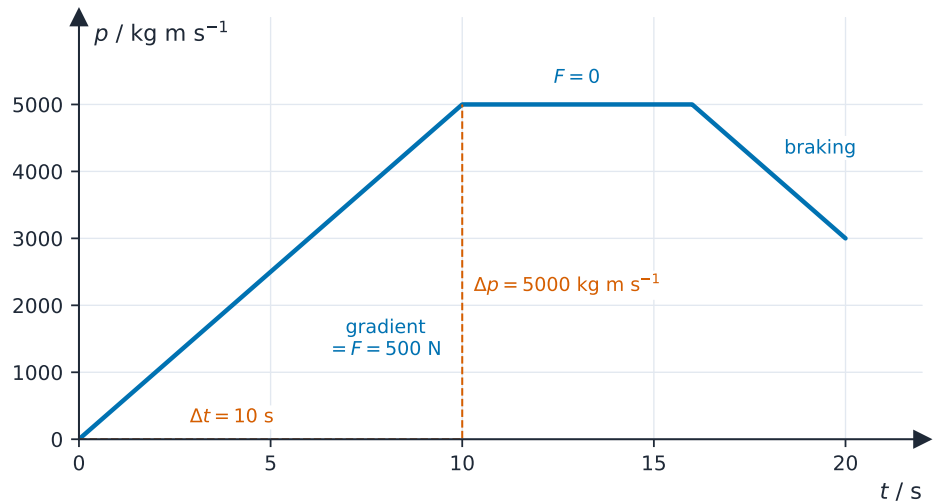

The gradient of a momentum–time graph is the resultant force: 500 N while accelerating, zero while the momentum is constant, negative while braking

> **Worked example.** The graph shows the momentum of a motorcycle. Find the resultant force on it during the first 10 s.

Gradient $= \Delta p/\Delta t = 5000/10 = 500$ N. Between 10 s and 16 s the momentum is constant, so the resultant force is zero: the driving force just balances the resistive forces. From 16 s to 20 s the momentum falls by 2000 kg m s^{-1}, so the resultant force is -500 N, acting backwards.

If a question tells you the speed is changing while the resultant force stays constant, that force cannot be air resistance: drag depends on speed, so it would change as the speed changes, and drag always acts against the motion.

Newton's three laws of motion

A rocket pushes gas down; by Newton's third law the gas pushes the rocket up.

First law

An object stays at rest, or keeps moving at constant velocity in a straight line, unless a resultant **external force** acts on it. In short: zero resultant force means zero acceleration.

Second law

The resultant force on an object equals its rate of change of momentum, and acts in the same direction as that change. In SI units,

$$F = \frac{\Delta p}{\Delta t} = ma \quad \text{(for constant mass).}$$

Acceleration and resultant force always point the **same way**.

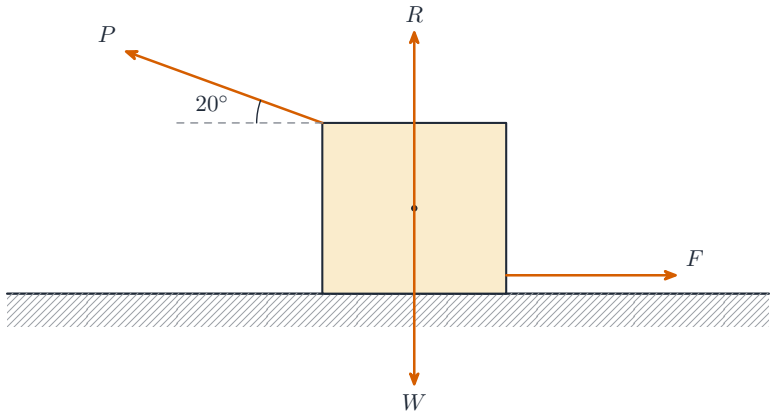

Free-body diagram showing all forces on a block being pulled at an angle

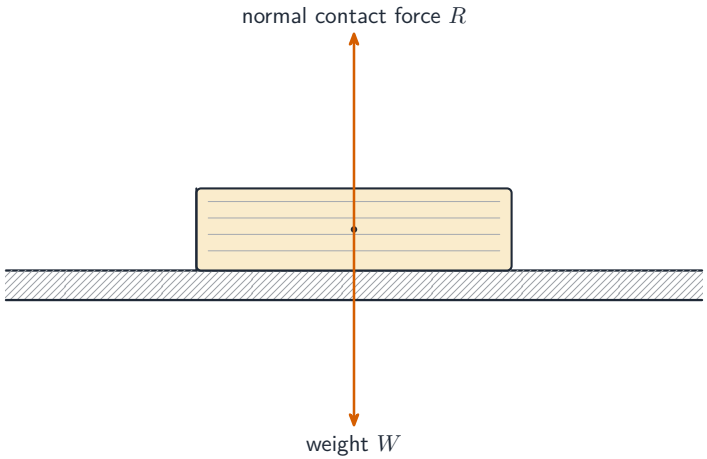

Weight and normal contact force on a book resting on a table

Third law

When body A pushes on body B, body B pushes back on body A with an **equal and opposite** force. The two forces:

- act on **different objects**,
- are of the **same type** (both gravitational, both contact, both **electrostatic**, and so on),
- have the same size and opposite direction.

A common trap: the **weight** of a block on a table and the **normal contact force** from the table are **not** a third-law pair (they act on the same object and

are different types). The third-law partner of the block's weight is the pull the block makes on the Earth. The third-law partner of the table's contact force is the push the block makes on the table.

To name a third-law partner, swap the two bodies in the sentence. "The back wheel of a bicycle pushes backwards on the road" pairs with "the road pushes forwards on the back wheel", and that forward push is what drives the bicycle. "The Earth pulls the Moon" pairs with "the Moon pulls the Earth", with the same size of force.

For a rocket: the **thrust** on the rocket and the force on the gases are a third-law pair (the engine pushes the gas down, the gas pushes the engine up). Weight and air resistance are not part of this pair.

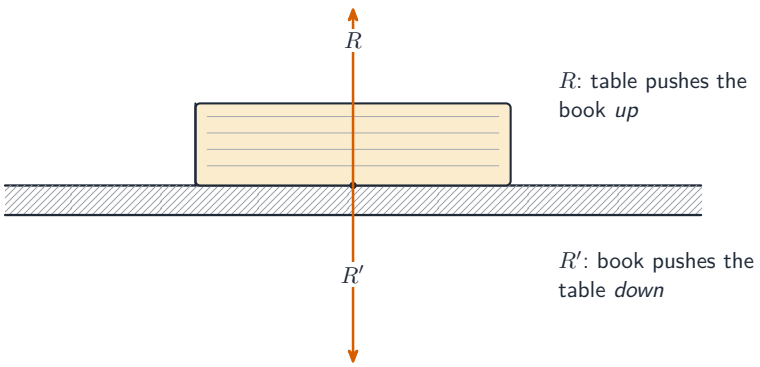

Newton's third-law pair: R on the book (up) and R' on the table (down)

Weight

Weight is the force on an object from a **gravitational field** . Near the Earth's surface,

$$W = mg,$$

where $g \approx 9.81$ m s^{-2} is the acceleration of free fall. Weight is a vector that points towards the centre of the Earth. Do not mix it up with mass: mass is the same everywhere, but weight changes with place.

On the Moon g is about 1.6 m s^{-2}, so an astronaut's mass is unchanged but their weight is about one sixth of its value on Earth. When a multiple-choice question asks which statement describes weight, the answer is the one that says "the force on the object due to a gravitational field", not "mass times acceleration" and not "the resultant force".

Non-uniform motion: friction, drag and terminal velocity

Friction and drag forces

A **friction** force between two solid surfaces acts along the surface and opposes the sliding. A **viscous** or **drag** force is the resistive force from a **fluid** (a liquid or gas) on an object moving through it; air resistance is the case for air. You do not need to use any **coefficient** of friction or viscosity.

A simple model: the drag gets bigger as the speed gets bigger. At zero speed, the drag is zero. Drag also grows with the **cross-sectional area** of the object and with the density of the fluid; a parachute works by making the area, and so the drag, much larger. These frictional forces and drag forces are all resistive forces: they act against the direction of motion and transfer kinetic energy to thermal energy.

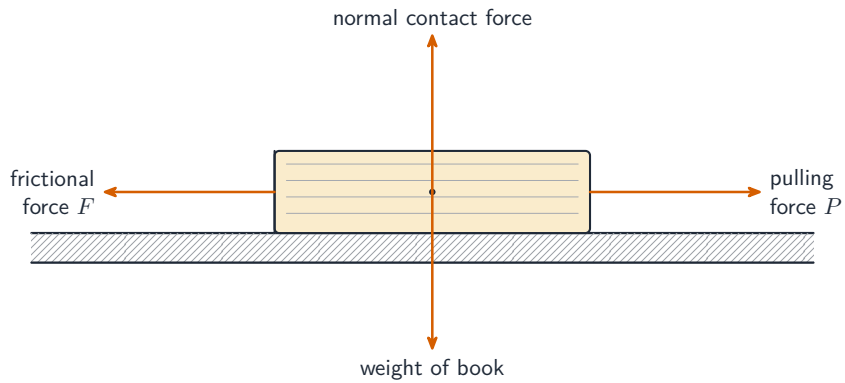

Free-body diagram of a book being pulled on a table

An object falling through air

For an object dropped from rest and falling through air:

1. At first, only weight acts, so the object speeds up downwards at g.
2. As the speed grows, the upward drag grows. The resultant force gets smaller, so the acceleration gets smaller.
3. In the end, the drag equals the weight. The resultant force is zero, the acceleration is zero, and the speed stays constant – the **terminal velocity** .

On a velocity–time graph, the line starts straight with gradient g, then bends and flattens at the terminal velocity. This shape (fast start, then slowing acceleration, then constant speed) is how "falling with air resistance" differs from "free fall in a vacuum" in a **uniform gravitational field** . On an acceleration–time graph the acceleration starts at g and decreases, curving down to zero.

Two spheres of the same size but different density have different terminal velocities: the denser sphere has the larger weight, so it needs a larger drag to balance it, and

drag only reaches that value at a higher speed. That is also why a parachute changes everything: when it opens, the drag suddenly exceeds the weight, the resultant force is upwards, and the skydiver **decelerates** (the acceleration is upwards while the velocity is still downwards) until the drag has fallen back to equal the weight at a new, much lower terminal velocity.

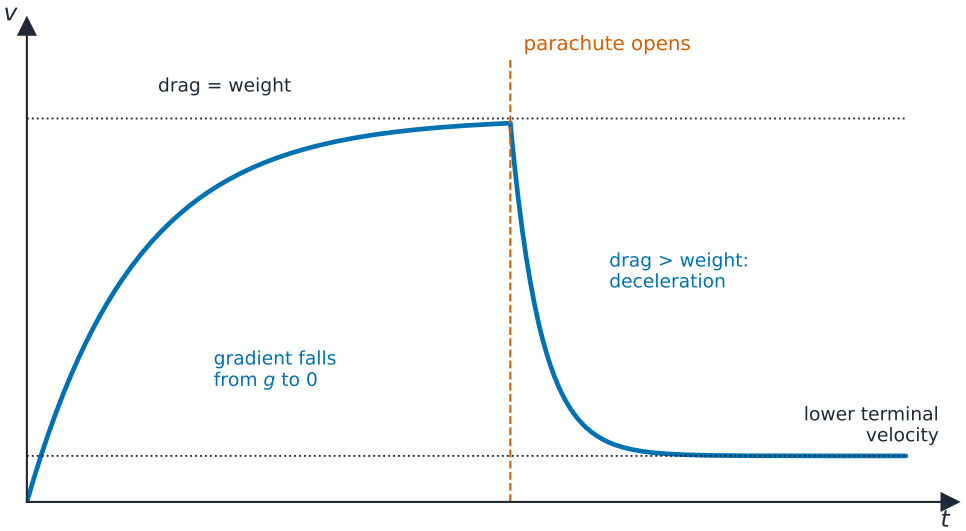

A skydiver's velocity–time graph: the acceleration falls from g to zero at the first terminal velocity; opening the parachute makes the drag exceed the weight, so the velocity falls to a new, lower terminal velocity

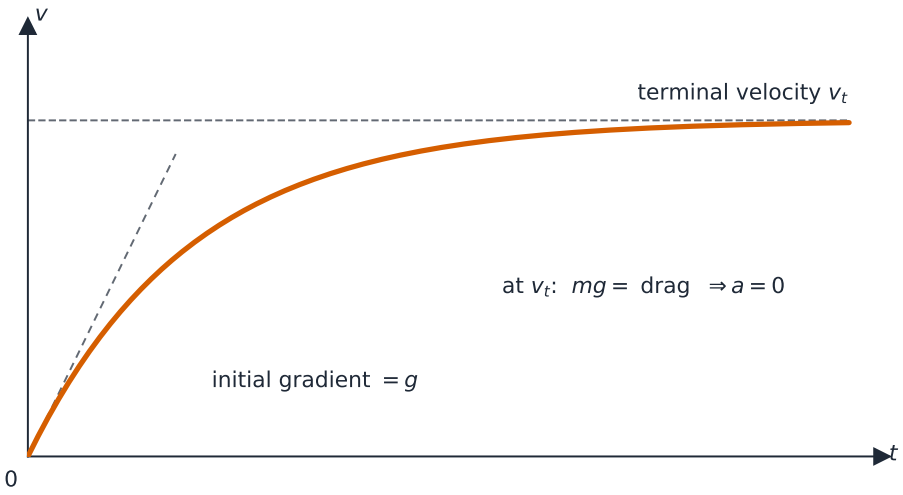

Velocity–time graph for an object falling through air

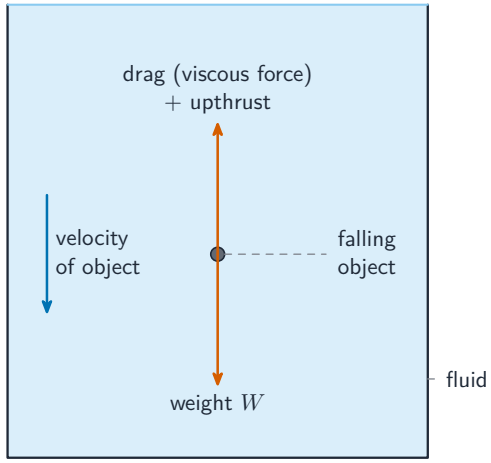

Forces on a falling object in a fluid

■ Falling through a liquid: three forces

A ball falling through a liquid has three forces on it: its weight downwards, the **upthrust** upwards, and the **viscous drag** upwards. The upthrust comes from **hydrostatic pressure**: the pressure in a liquid increases with depth, so the liquid pushes harder on the bottom of the ball than on the top, and the resultant of these pushes is upwards. Its size is the weight of the liquid the ball displaces, $U = \rho_{\text{liquid}} V g$ (topic 4). The drag grows with speed. When weight = upthrust + drag, the resultant force is zero and the ball falls at its terminal speed. A "draw labelled arrows" question wants exactly these three, with the upthrust and drag both up and the weight down.

> **Worked example.** A steel ball of radius 2.0 mm and weight 2.56×10^{-3} N falls through oil of density 850 kg m^{-3}. The viscous drag on it is $F = 6\pi\eta r v$, where η is the **viscosity** of the oil and v the speed. (a) Find the SI base units of η. (b) Show that the upthrust on the ball is 2.8×10^{-4} N. (c) Taking $\eta = 0.20$ in SI units, find the terminal speed.

(a) $\eta = F/(6\pi r v)$, so its units are $\text{N}/(\text{m} \cdot \text{m s}^{-1}) = \text{kg m s}^{-2}/(\text{m}^2\ \text{s}^{-1}) = \text{kg m}^{-1}\ \text{s}^{-1}$.
(b) $V = \frac{4}{3}\pi r^3 = \frac{4}{3}\pi(2.0 \times 10^{-3})^3 = 3.35 \times 10^{-8}$ m^3, so $U = 850 \times 3.35 \times 10^{-8} \times 9.81 = 2.79 \times 10^{-4}$ N $\approx 2.8 \times 10^{-4}$ N.
(c) At the terminal speed, drag $= W - U = 2.56 \times 10^{-3} - 2.8 \times 10^{-4} = 2.28 \times 10^{-3}$ N. So $v = F/(6\pi\eta r) = 2.28 \times 10^{-3}/(6\pi \times 0.20 \times 2.0 \times 10^{-3}) = 0.30$ m s^{-1}.

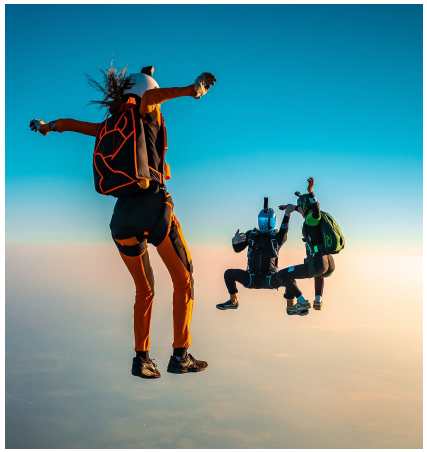

Why the spread-eagle pose? Spreading out gives the largest area, so the most drag. The bigger the drag, the sooner drag balances weight – and the lower the steady terminal velocity they fall at

■ Energy during a terminal-velocity fall

At terminal velocity, a **parachutist** has constant kinetic energy. But the **gravitational potential energy** keeps falling as they go down. Where does it go? Almost all of it turns into **thermal energy** of the air around them. It does **not** become kinetic energy of the parachutist – that stays constant.

■ Cyclist or car at constant speed

A vehicle at constant speed on a flat road has zero resultant force. The forward **driving force** is equal and opposite to the total resistive force (friction, air resistance, and rolling resistance). At higher speed the drag is larger, so the driving force must be larger too – and so the **power** must be larger.

On a slope the weight has a component along the road. Going up at constant speed, the driving force must balance the resistive force **and** the part of the weight that pulls down the slope, $W \sin\theta$; going down, that same component helps the motion.

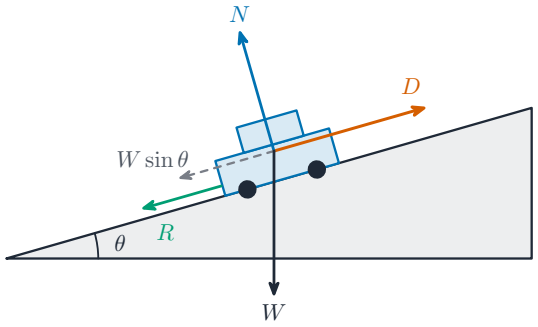

A car climbing a slope at constant speed: along the slope the driving force balances the resistive force plus the weight's component $W \sin\theta$

> **Worked example.** A car of mass 1500 kg climbs a road inclined at 12° to the horizontal at a constant 30 m s^{-1}. The total resistive force is 1600 N. Find the driving force and the useful output power of the engine.

Constant speed means zero resultant force along the slope: $D = 1600 + 1500 \times 9.81 \times \sin 12° = 1600 + 3060 = 4660$ N ≈ 4700 N. Power is force times velocity (topic 5): $P = Dv = 4660 \times 30 = 1.4 \times 10^5$ W.

Conservation of linear momentum

In a crash, a large force acts over a very short time to change momentum.

■ The principle

For a system with no resultant external force, the total momentum stays constant. This is **conservation of momentum**. Stated for the two marks the examiner gives: **the total momentum of a system of objects remains constant provided no resultant external force acts on the system.** Both halves are needed: "total momentum is constant" alone scores one.

It always holds when there is no outside resultant force – in collisions, **explosions**, and **recoil**. In two dimensions, momentum is conserved along each direction on its own.

> **Worked example.** A 2.0 kg trolley and a 3.0 kg trolley are held together against a compressed spring, then released from rest. The 2.0 kg trolley flies off at 6.0 m s^{-1}. Find the speed of the other trolley.

The total momentum stays zero (it started at rest), so

$$0 = (2.0)(6.0) + (3.0)(-v) \quad \Rightarrow \quad v = \frac{12}{3.0} = 4.0 \text{ m s}^{-1}$$

in the opposite direction.

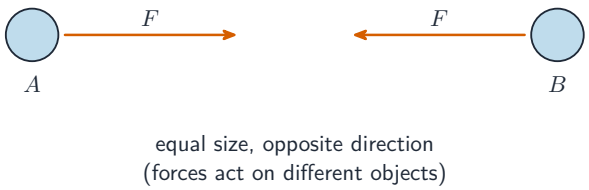

Newton's third law in an isolated two-particle system: equal and opposite forces

Elastic and inelastic collisions

In **every** collision, momentum is conserved (if there is no outside resultant force).

An **elastic collision** is one where the total kinetic energy is **also** conserved. A quick test: in an elastic collision, the **relative speed** of approach equals the relative speed of separation.

In an **inelastic collision**, momentum is conserved but kinetic energy goes down – some becomes thermal, sound, or **deformation** energy. If the two objects stick together, the collision is perfectly inelastic.

Solving collision problems (one dimension)

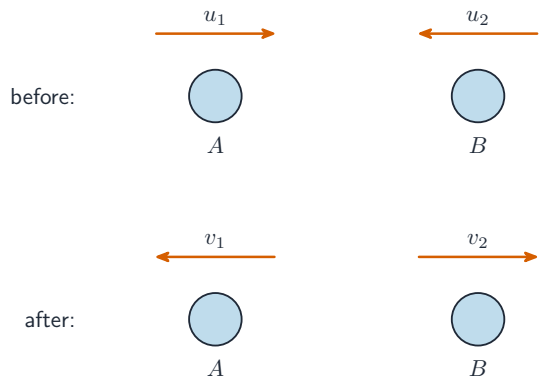

Head-on collision: velocities before and after

For two objects with masses m_1, m_2 and starting velocities u_1, u_2 that hit **head-on**, write

$$m_1 u_1 + m_2 u_2 = m_1 v_1 + m_2 v_2.$$

Use **signed** velocities (positive in one chosen direction). If the collision is elastic, add the relative-speed equation

$$u_1 - u_2 = -(v_1 - v_2),$$

or, the same thing, $\frac{1}{2}m_1 u_1^2 + \frac{1}{2}m_2 u_2^2 = \frac{1}{2}m_1 v_1^2 + \frac{1}{2}m_2 v_2^2$. That gives two equations for two unknowns.

> **Worked example.** A 1500 kg car moving at 12 m s^{-1} runs into a stationary 1000 kg car and they lock together. Find their common velocity just after the collision.

Momentum is conserved (the cars stick, so $v_1 = v_2 = v$):

$$1500 \times 12 + 1000 \times 0 = (1500 + 1000)\, v \quad \Rightarrow \quad v = \frac{18\,000}{2500} = 7.2 \text{ m s}^{-1}.$$

Questions often go on to ask what fraction of the kinetic energy is transferred to other forms. Before: $E_\text{k} = \frac{1}{2} \times 1500 \times 12^2 = 1.08 \times 10^5$ J. After: $\frac{1}{2} \times 2500 \times 7.2^2 = 6.48 \times 10^4$ J. So 4.3×10^4 J, which is 40% of the original kinetic energy, becomes thermal energy, sound and deformation of the cars. Momentum is conserved; kinetic energy is not.

> **Worked example.** A stationary nucleus of mass $222\,u$ decays by emitting an **alpha particle** α of mass $4\,u$ at 1.6×10^7 m s^{-1}. Find the speed of the remaining nucleus.

Before the decay the total momentum is zero, so afterwards the two momenta are equal and opposite: $218\,u \times v = 4\,u \times 1.6 \times 10^7$, giving $v = 2.9 \times 10^5$ m s^{-1} in the opposite

direction to the alpha particle. The unit u cancels, so its value is never needed. In a decay the momentum, the charge (proton number), the nucleon number and the total mass–energy are all conserved (topic 11).

A useful result for a head-on elastic collision of mass m with a **stationary** mass M:

$$v_m = \frac{m - M}{m + M}u, \qquad v_M = \frac{2m}{m + M}u.$$

■ Collisions in two dimensions

If the objects move in two dimensions, split the velocities into **perpendicular components** and apply conservation of momentum along each direction on its own. For a collision where the objects hit at an angle, choose one axis along the first object's motion and one across it. The total momentum is conserved along each axis.

> **Worked example.** On a frictionless surface, ball A has momentum 4.0 N s due east and ball B has momentum 3.0 N s due north. They collide and stick together. Find the momentum of the combined object.

Momentum is conserved along each axis: 4.0 N s east and 3.0 N s north after the collision, exactly as before. The total momentum is the vector sum, $\sqrt{4.0^2 + 3.0^2} = 5.0$ N s at $\tan^{-1}(3.0/4.0) = 37°$ north of east; the combined object moves that way at 5.0 N s divided by the total mass. A multiple-choice diagram of two momentum arrows is asking exactly this: add the arrows tip to tail.

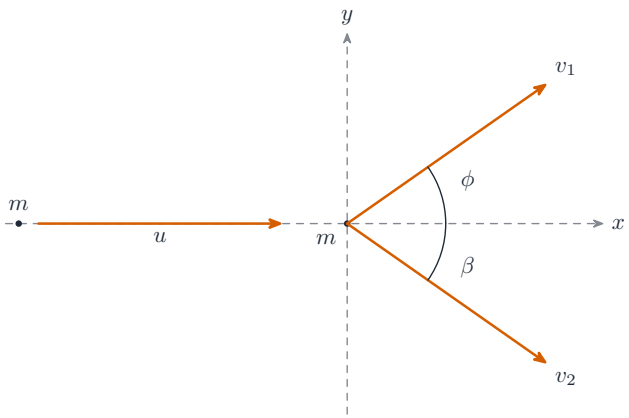

A glancing collision resolved along two perpendicular axes

■ Rocket / pushing out mass

A rocket pushes out gas at velocity u (relative to itself) at a **mass-flow rate** $\dot{m}$ (kg per second). It feels a thrust

$$F = \dot{m} \cdot u,$$

which comes from $F = \Delta p/\Delta t$. The momentum given to the gas each second equals the thrust on the rocket (Newton's third law: the rocket pushes the gas one way, the gas pushes the rocket the other way). An engine ejecting 90 kg of gas per second at 190 m s^{-1} produces a thrust of $90 \times 190 = 1.7 \times 10^4$ N.

> **Worked example.** A rocket of weight W leaves the ground with an initial acceleration a. What thrust does its engine produce?

Take upwards as positive. The resultant force is thrust minus weight, so $T - W = ma$. With $m = W/g$, $T = W + Wa/g = W(1 + a/g)$. A rocket of weight 2.0×10^6 N accelerating at 4.0 m s^{-2} needs a thrust of $2.0 \times 10^6 \times (1 + 4.0/9.81) = 2.8 \times 10^6$ N. The thrust must exceed the weight before the rocket moves at all.

■ Connected bodies moving along different lines

Draw a separate force diagram for each body. A light string over a smooth pulley has the same tension on both sides; a taut inextensible string gives the bodies the same acceleration magnitude. Choose a positive direction along each body's motion.

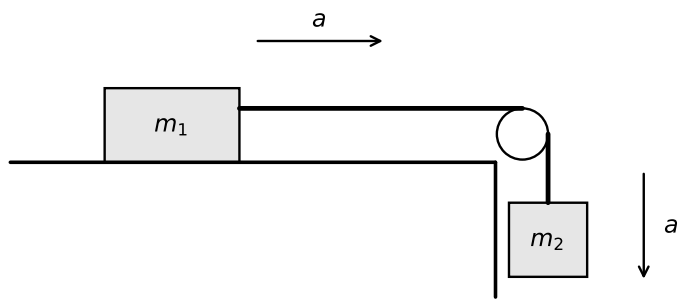

> **Worked example.** A 4.0 kg block on a smooth table is joined to a hanging 1.0 kg mass. For the block, $T = m_1 a$; for the hanging mass, $m_2 g - T = m_2 a$. Adding cancels the internal tension: $a = m_2 g/(m_1 + m_2) = 1.0 \times 9.81/(4.0 + 1.0) = 1.96$ m s^{-2}. Then $T = m_1 a = 4.0 \times 1.96 = 7.85$ N. Normal force and weight balance on the block, but weight and tension do not balance on the accelerating hanging mass.

Definitions the examiner accepts

A definition question is marked against fixed wording. Learn these exactly, and give one answer only.

Term	Definition
mass	the property of an object that resists a change in its motion
linear momentum	the product of an object's mass and its velocity
force	the rate of change of momentum
Newton's first law	an object remains at rest or moves at constant velocity unless acted on by a resultant force
Newton's second law	the resultant force on an object is proportional to the rate of change of its momentum, and acts in the direction of the change
Newton's third law	when two bodies interact, the force on one is equal in magnitude and opposite in direction to the force on the other
weight	the force on an object due to a gravitational field; equal to the product of its mass and the acceleration of free fall
principle of conservation of momentum	the total momentum of a system of objects remains constant provided no resultant external force acts on the system
elastic collision	a collision in which total kinetic energy is conserved (and the relative speed of approach equals the relative speed of separation)
inelastic collision	a collision in which momentum is conserved but some kinetic energy is transferred to other forms
terminal velocity	the constant velocity reached when the resistive force on a moving object equals the force driving it, so the resultant force is zero

Exam tips

- **Newton's second law is** $F = \Delta p/\Delta t$ (rate of change of momentum); $F = ma$ is the special case for constant mass.
- Identify **third-law pairs** correctly: the same type of force, acting on **two different bodies** – not the balanced forces on one body.
- **Momentum is conserved** in every collision; kinetic energy is conserved only in an **elastic** collision.
- For **terminal velocity**, explain that drag rises with speed until drag = weight, so the acceleration becomes zero.

Common mistakes

- Writing "the forces are balanced" or "the forces cancel out". Say "the resultant force on the object is zero".
- Adding both speeds in a head-on collision because momentum is "total". Choose a positive direction, give the opposing velocity a minus sign, then add.
- Calculating kinetic energy from a component of the velocity. Kinetic energy uses the full speed of each body.
- Calling the weight and the normal contact force on one object a third-law pair. A pair acts on two different objects and is one type of force.
- Stating conservation of momentum without the condition. It holds only when no resultant external force acts on the system.